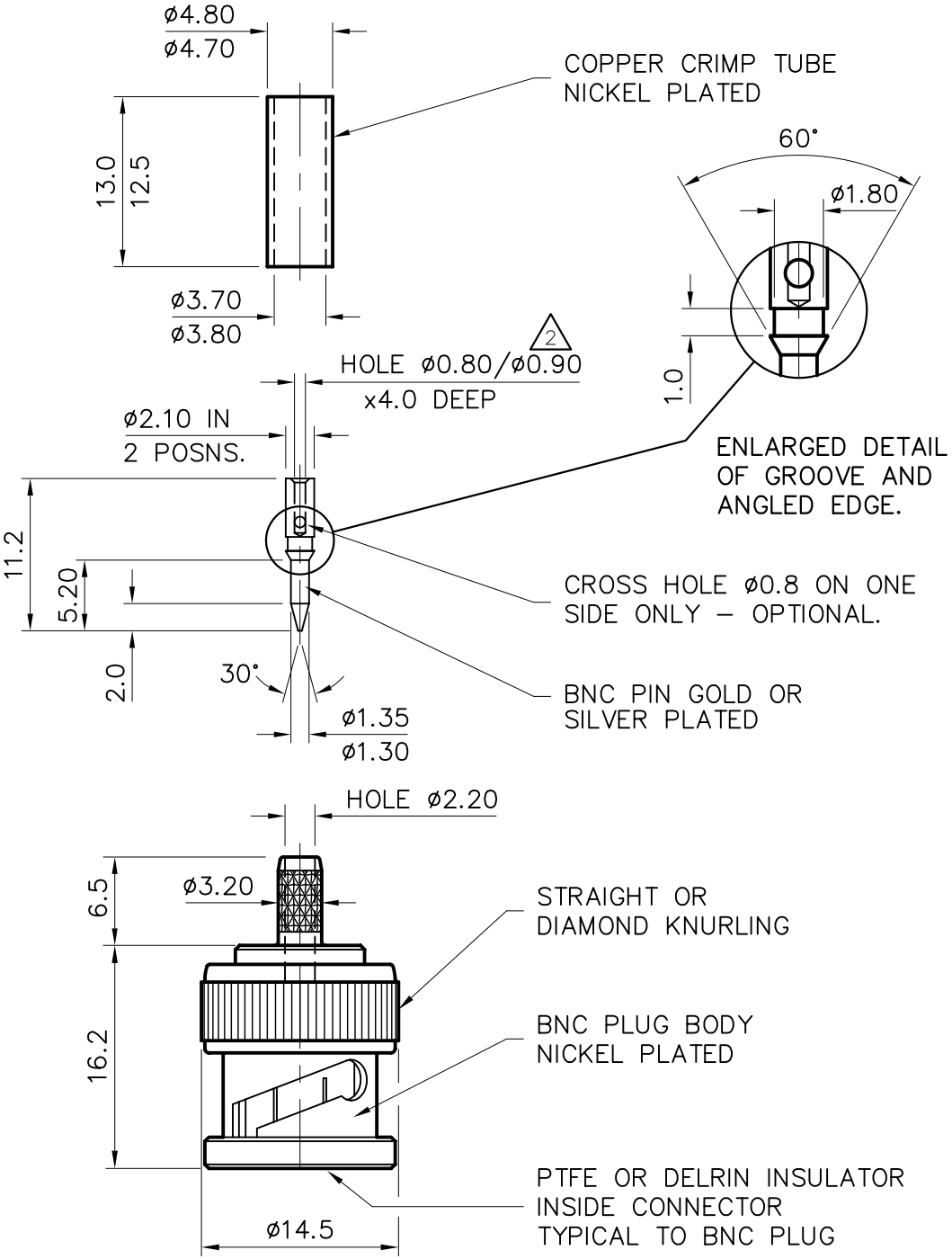

NOTES: –

1. IMPEDANCE: – 50Ω.
2. HOLE IN CONTACT PIN MUST BE ø0.8 mm AS SHOWN.
3. EXTERNAL ROUGHNESS OF CONTACT PIN TO BE N5 (Ra 0.4μm) ALL OVER
4. ALL MATERIALS USED MUST BE RoHS COMPLIANT.

DRG. No.	SC1–BNC–PC35
TITLE	BNC STRAIGHT CRIMP PLUG FOR ø3.5mm COAX CABLE
MATERIAL	
FINISH	
DRAWN A.G.	DO.CHECK K.D.
SCALE 2:1	DIMENSIONS IN mm

TOLERANCES UNLESS OTHERWISE STATED

0 DEC. PLACE	±0.5	2 DEC. PLACES	±0.1
1 DEC. PLACE	±0.2	ANGULAR	±1°

DO NOT SCALE — PROJECTION

C/NOTE	ISSUE	DATE	APPROVAL
01019	1	4.12.07	K.D.
01019	2	20.01.10	K.D.

△ — DENOTES LATEST ISSUE CHANGES

PANORAMA ANTENNAS

THIS DOCUMENT MUST NOT BE COPIED OR DISCLOSED TO A THIRD PARTY WITHOUT THE WRITTEN CONSENT OF PANORAMA ANTENNAS LTD.

© 2007

A4