PROJECTION	DO NOT SCALE	△ — DENOTES LATEST ISSUE CHANGES	© 2009 A4	THIS DOCUMENT MUST NOT BE COPIED OR DISCLOSED TO A THIRD PARTY WITHOUT THE WRITTEN CONSENT OF PANORAMA ANTENNAS LTD.	DRG. No. C74–FP–015–RMMCX

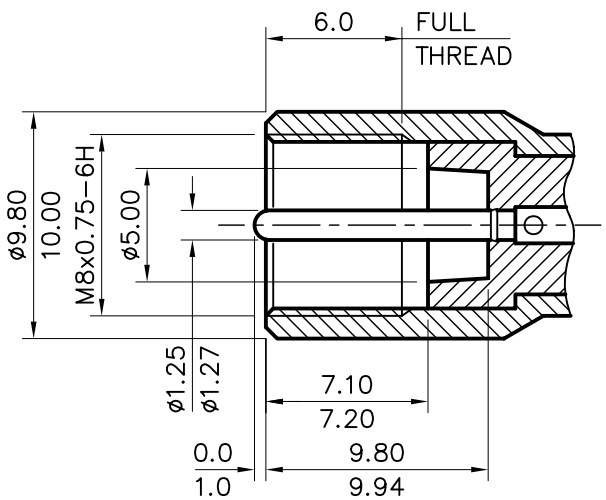

△3 ENLARGED DETAIL OF FME PLUG – SEE NOTE 6

CABLE SPECIFICATION NOTES :–

1. DIMENSIONS AND CONSTRUCTION TYPICAL OF JIS 1.5D–2V OR RG174A
2. DIELECTRIC MATERIAL CROSS LINK POLYTHENE
3. IMPEDANCE – 50 OHMS
4. ATTENUATION – 1.25dB/m @1.575GHz

GENERAL NOTES :–

5. MINIMUM CONNECTOR PULL OFF FORCE – 50N
6. CONNECTORS MUST CONFORM TO STANDARD INTERFACE DIMENSIONS SHOWN IN DETAIL 1 & 2
7. ALL MATERIALS USED MUST BE RoHS COMPLIANT

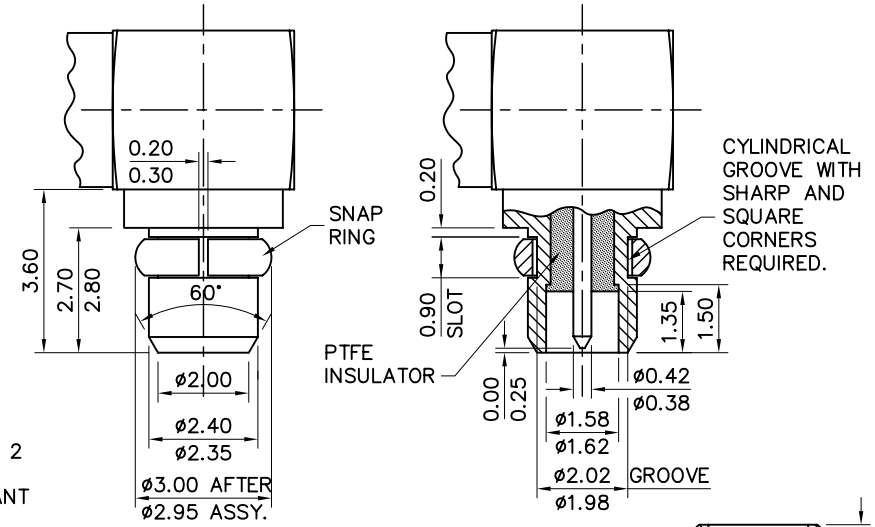

△3 ENLARGED DETAIL OF RIGHT ANGLE MMCX PLUG – SEE NOTE 6

SECTION THRO. SNAP RING

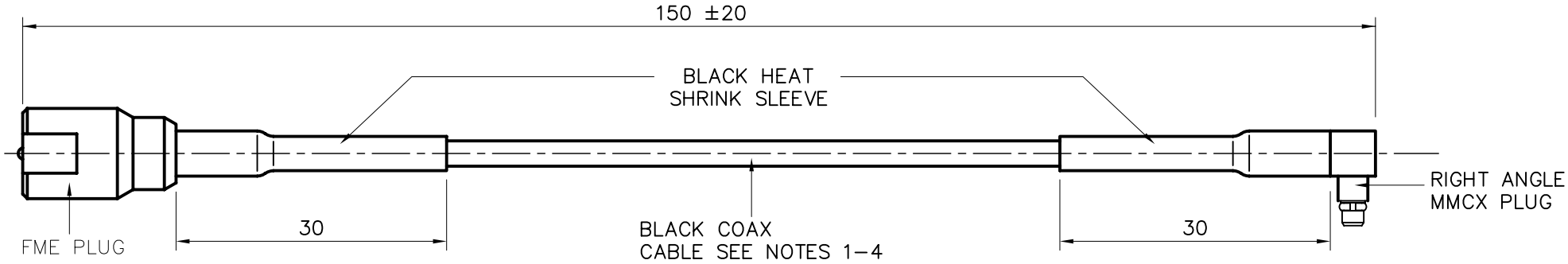

△3 REDRAWN WITH CONNECTOR INTERFACE DIMENSIONS ADDED

C/NOTE	ISSUE	DATE	APPROVAL
01019	1	20.9.05	K.D.
01019	2	22.9.05	A.J.
01019	3	14.8.09	K.D.

TOLERANCES UNLESS OTHERWISE STATED
0 DEC. PLACE ±0.5 2 DEC. PLACES ±0.1
1 DEC. PLACE ±0.2 ANGULAR ±1°

MATERIAL

FINISH

TITLE
FME(m) – R/ANGLE MMCX PLUG RG174 COAX CABLE 150mm LONG

DRAWN	DO.CHECK	SCALE	DIMENSIONS IN mm
A.G.	K.D.	3:2	

PANORAMA ANTENNAS