3RD ANGLE PROJECTION	DO NOT SCALE	DENOTES LATEST ISSUE CHANGES	DENOTES CRITICAL VALUE

© 2012 A3 THIS DOCUMENT MUST NOT BE COPIED OR DISCLOSED TO A THIRD PARTY WITHOUT THE WRITTEN CONSENT OF PANORAMA ANTENNAS LTD.

TOLERANCES UNLESS OTHERWISE STATED			
0 DEC. PLACE	±0.5	2 DEC. PLACES	±0.1
1 DEC. PLACE	±0.2	ANGULAR	±1°

DWG. No. DMM-7-27-2TS9

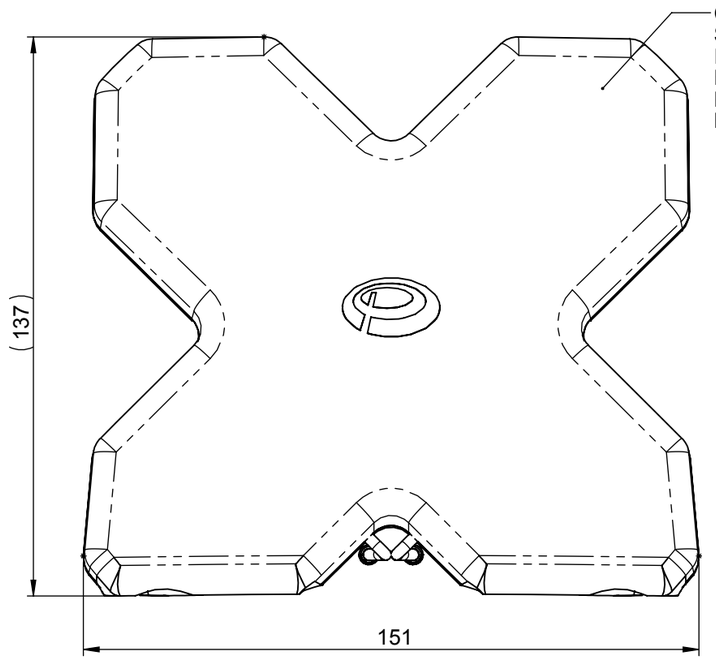

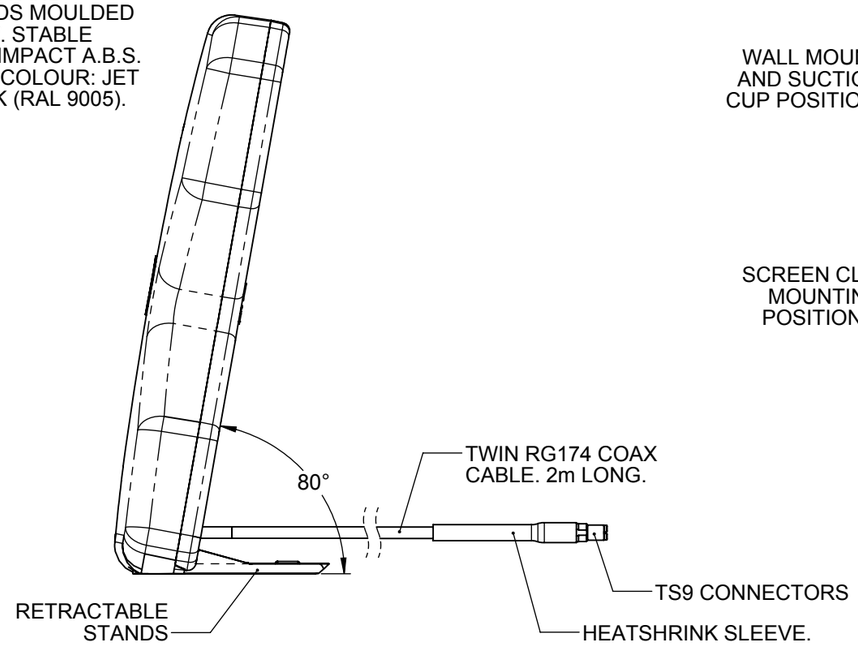

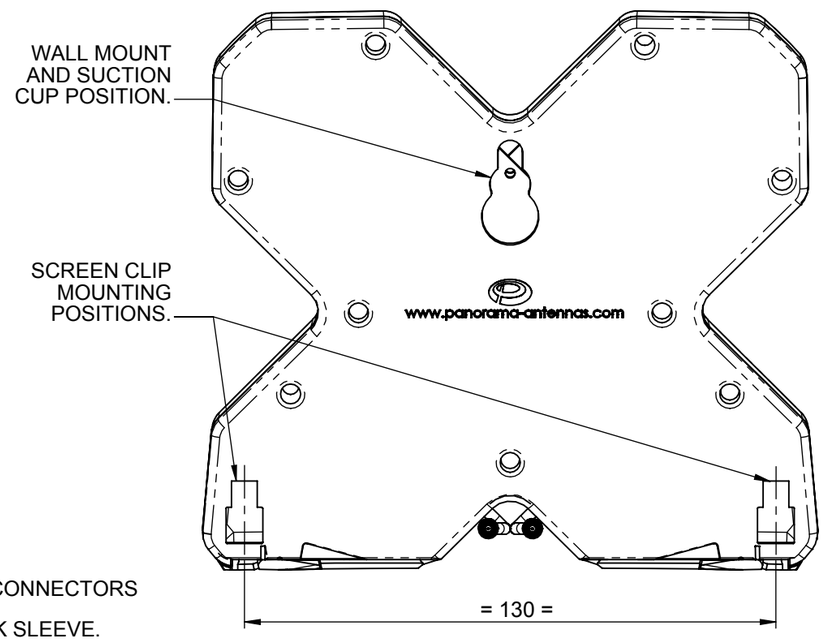

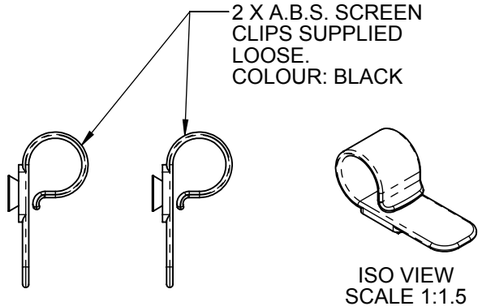

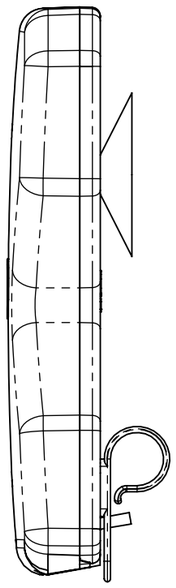

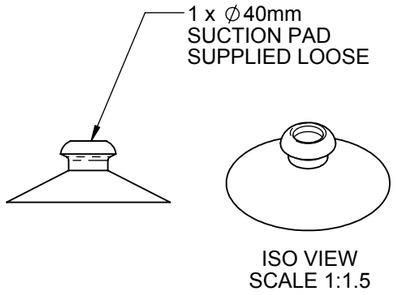

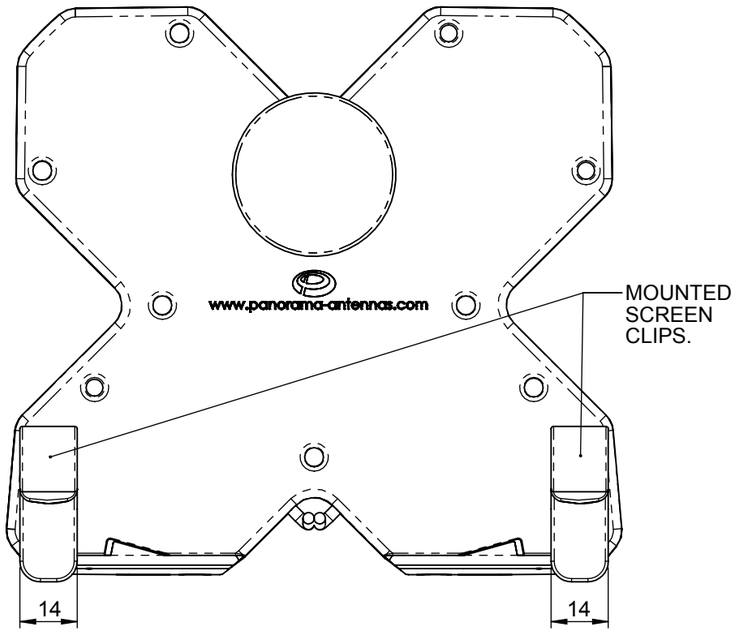

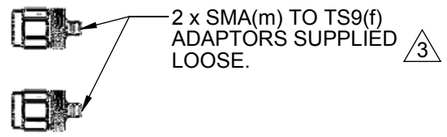

ISO VIEWS SCALE 1:3

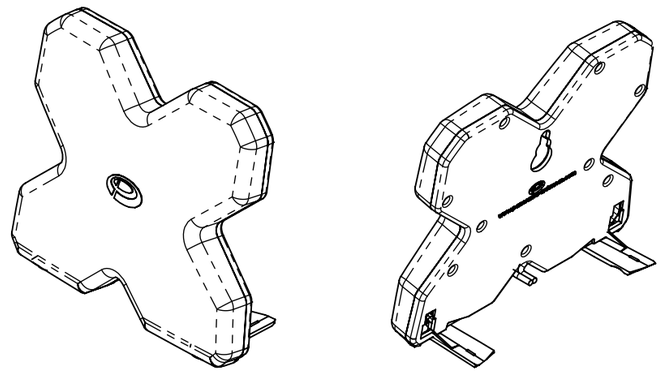

PCN	REV.	DESCRIPTION OF CHANGE	DATE	DRAWN
01019	3	SMA(m)-TS9(f) ADAPTORS ADDED.	13/05/2013	PE
01019	2	INTERNAL COMPONENT ADDED.	19/06/2012	PE
01019	1	PRODUCTION ISSUE	12/04/2012	PE

REVISIONS

NOTES:

1. ALL MATERIALS SUPPLIED MUST BE RoHS COMPLIANT.
2. SAMPLES MUST BE APPROVED BY PANORAMA ANTENNAS Q.C. BEFORE COMMENCING PRODUCTION.

PRODUCT/ASSEMBLY	DMM-7-27
MATERIAL	N/A
FINISH	N/A
WEIGHT	307g
SHEET	1 OF 1
DESCRIPTION	MIMO DESK MOUNT ANTENNA WITH SCREEN CLIPS, 2m TWIN COAX, TS9 PLUGS.
APPROVED	KD
D.O. CHECK	KD
SCALE	1:1.5
DIMENSIONS IN mm	

PANORAMA ANTENNAS