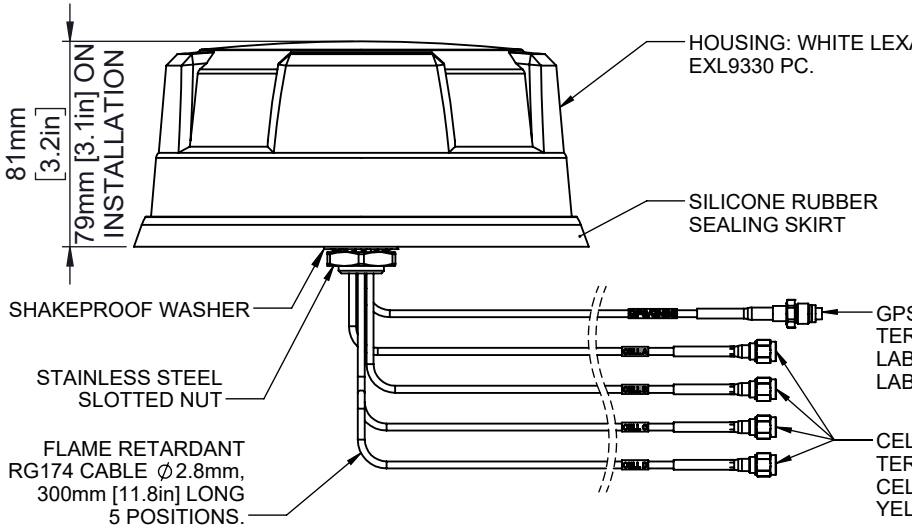

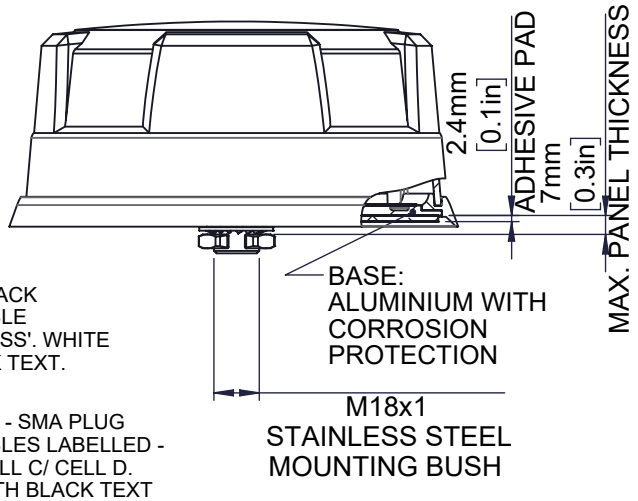

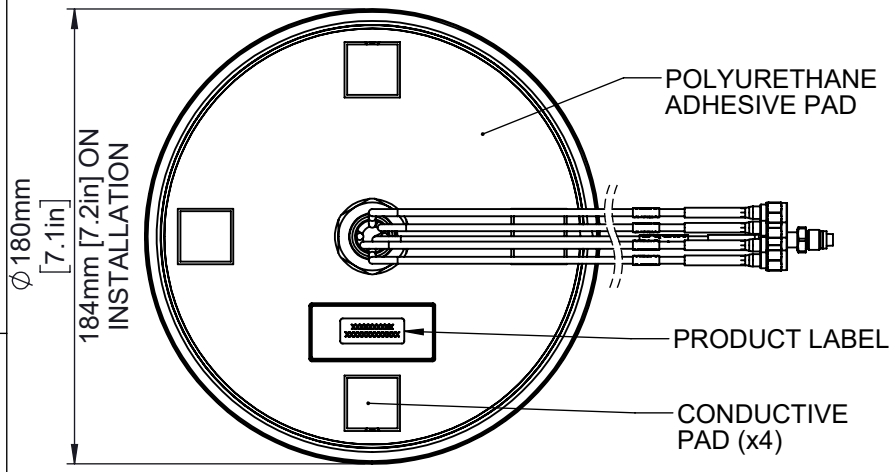

OPERATING FREQUENCIES:
CELL A: 617-960/1710-6000 MHz
CELL B: 617-960/1710-6000 MHz
CELL C: 617-960/1710-6000 MHz
CELL D: 617-960/1710-6000 MHz
GPS/GNSS: 1562-1612 MHz 26dB LNA

ISO VIEW
SCALE 1:5

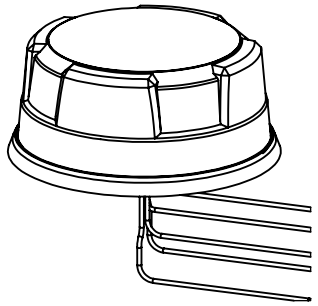

NOTES:

1. SAMPLES MUST BE APPROVED BY PANORAMA ANTENNAS Q.C. BEFORE COMMENCING PRODUCTION.
2. ALL MATERIALS SUPPLIED MUST BE RoHS3 (DIRECTIVE (EU) 2015/863) COMPLIANT AND MUST NOT CONTAIN ANY SUBSTANCES OF VERY HIGH CONCERN (SVHCs) LISTED UNDER REACH OR POLY-AROMATIC HYDROCARBONS (PAHs), OR PERSISTENT ORGANIC POLLUTANTS (POPs) CONTROLLED BY THE STOCKHOLM CONVENTION.

DRG. No.	LGMM4-6-60
SHEET	1 OF 2
PRODUCT/ASSEMBLY	1012 - MIMO AND DIVERSITY ANTENNAS
DESCRIPTION	4G/5G 4x4 MiMo GPS/GNSS - WHT
MATERIAL	N/A
FINISH	N/A
WEIGHT	900 (net)g
APPROVED	JJ
DO.CHECK	CL
SCALE	1:5
	DIMENSIONS IN mm
DO NOT SCALE	3RD ANGLE PROJECTION

PCN	REV.	DESCRIPTION	DATE	DRN
01019	A	INITIAL ISSUE	09/10/2019	AA

TOLERANCES UNLESS OTHERWISE STATED

0 DEC. PLACE	±0.5	2 DEC. PLACES	±0.1
1 DEC. PLACE	±0.2	ANGULAR	±1°

△ DENOTES LATEST ISSUE CHANGES

⬭ DENOTES CRITICAL VALUE

PANORAMA ANTENNAS

THIS DOCUMENT MUST NOT BE COPIED OR DISCLOSED TO A THIRD PARTY WITHOUT THE WRITTEN CONSENT OF PANORAMA ANTENNAS LTD.

© 2019

A4