THIS IS A PROPRIETARY ITEM OF PANORAMA ANTENNAS LTD. AND COULD BE SUBJECT TO CHANGE WITHOUT PRIOR NOTICE. THIS ITEM IS RoHS COMPLIANT.

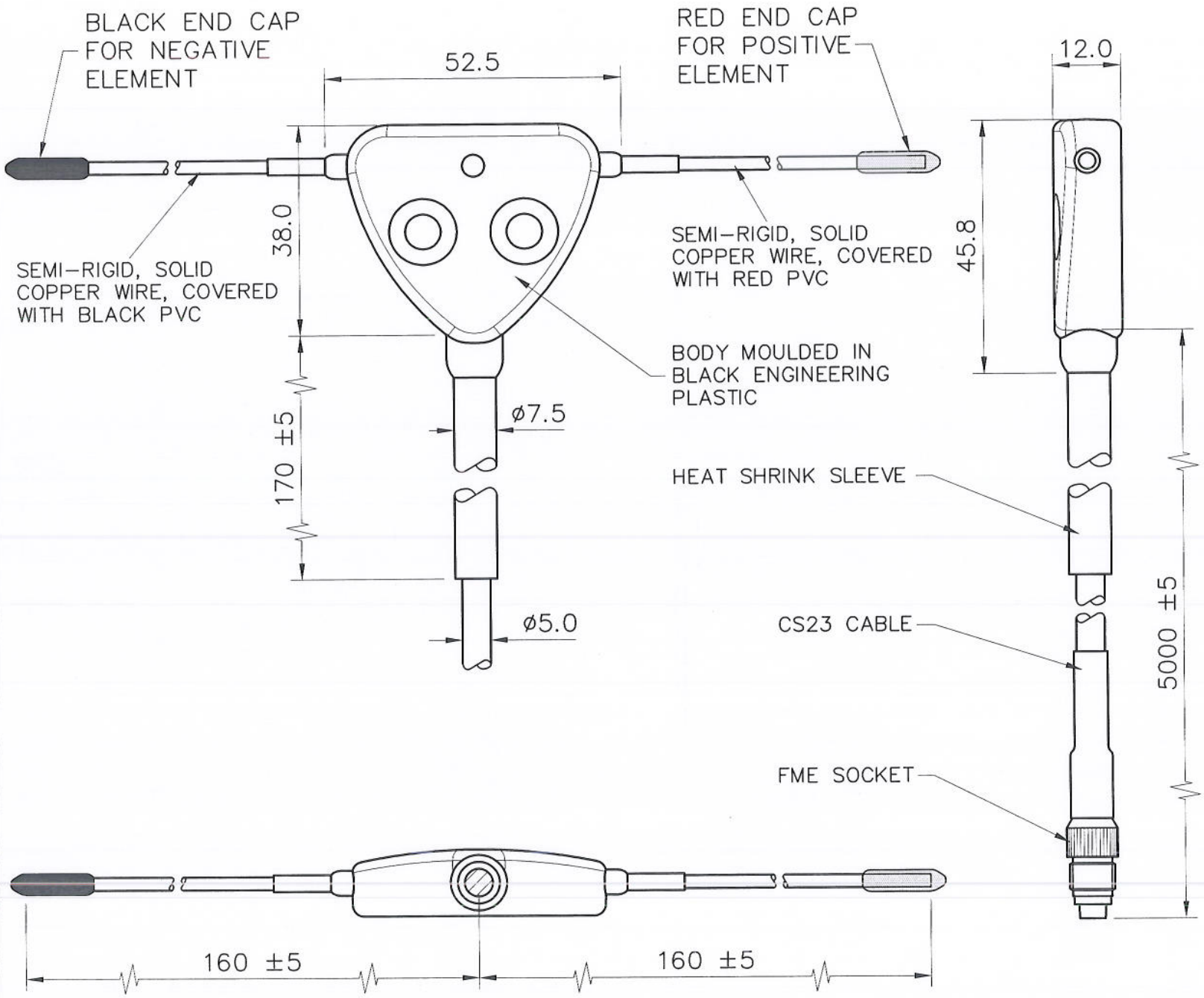

DRG. No.	VCD–TET–5F
TITLE	UHF VEHICLE COVERT DIPOLE ANTENNA 5m FME SOCKET 380–430MHz.
MATERIAL	
FINISH	
DRAWN	A.G.
DO.CHECK	KD
SCALE	1:1
DIMENSIONS IN mm	

TOLERANCES UNLESS OTHERWISE STATED

0 DEC. PLACE	±0.5	2 DEC. PLACES	±0.1
1 DEC. PLACE	±0.2	ANGULAR	±1°

DO NOT SCALE — PROJECTION

C/NOTE	ISSUE	DATE	APPROVAL
01019	1	02.02.16	KD

△ — DENOTES LATEST ISSUE CHANGES

PANORAMA ANTENNAS

THIS DOCUMENT MUST NOT BE COPIED OR DISCLOSED TO A THIRD PARTY WITHOUT THE WRITTEN CONSENT OF PANORAMA ANTENNAS LTD.

© 2016

A4