DRG. No.	CM-S1-08NJ	© 2019 A4 THIS DOCUMENT MUST NOT BE COPIED OR DISCLOSED TO A THIRD PARTY WITHOUT THE WRITTEN CONSENT OF PANORAMA ANTENNAS LTD.	DO NOT SCALE	DENOTES LATEST ISSUE CHANGES	DENOTES CRITICAL VALUE	PROJECTION

TOLERANCES UNLESS OTHERWISE STATED			
0 DEC. PLACE	±0.5	2 DEC. PLACES	±0.1
1 DEC. PLACE	±0.2	ANGULAR	±1°

NOTES:

1. SAMPLES MUST BE APPROVED BY PANORAMA ANTENNAS Q.C. BEFORE COMMENCING PRODUCTION.

2. ALL MATERIALS SUPPLIED MUST BE RoHS3 (DIRECTIVE (EU) 2015/863) COMPLIANT AND MUST NOT CONTAIN ANY SUBSTANCES OF VERY HIGH CONCERN (SVHCs) LISTED UNDER REACH OR POLY-AROMATIC HYDROCARBONS (PAHs), OR PERSISTENT ORGANIC POLLUTANTS (POPs) CONTROLLED BY THE STOCKHOLM CONVENTION.

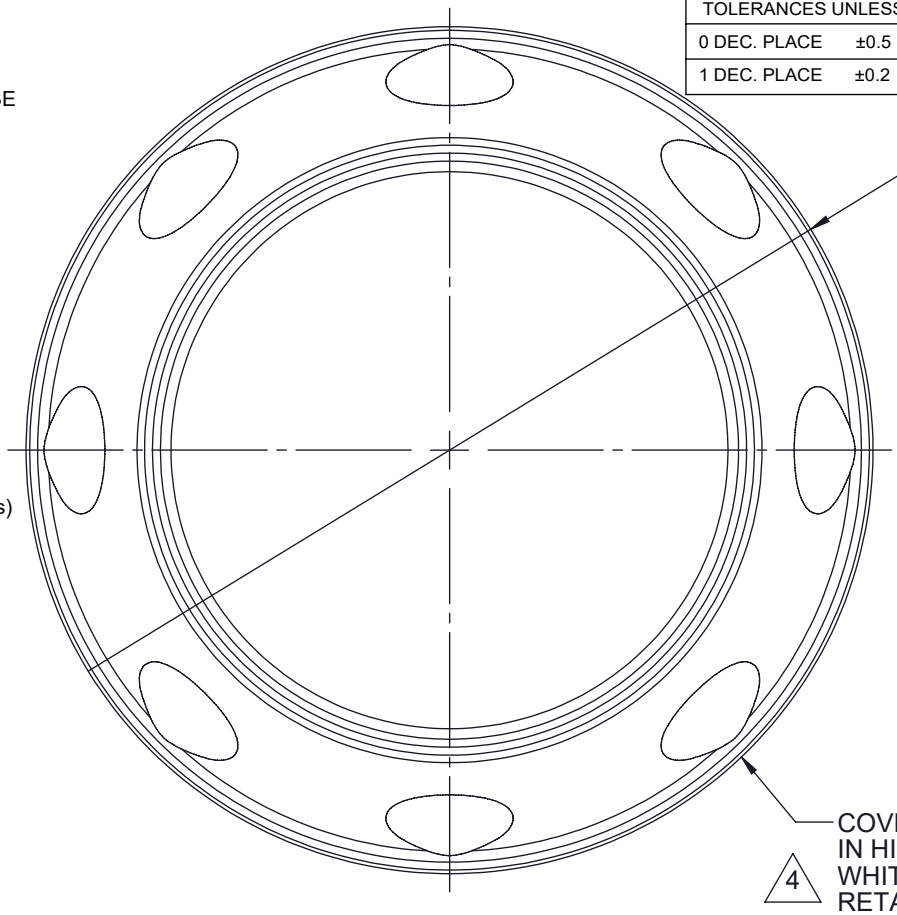

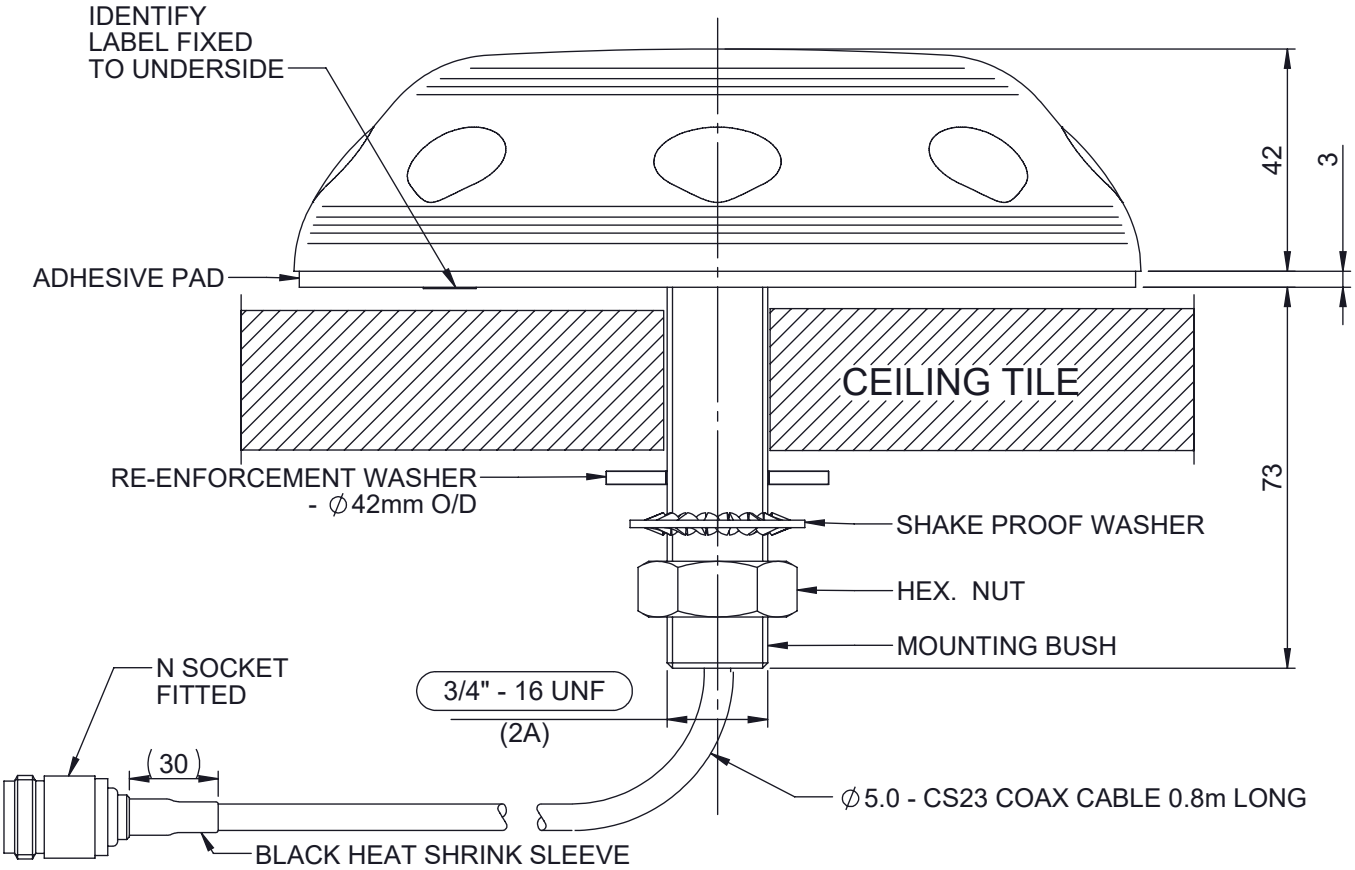

PCN	REV.	DESCRIPTION	DATE	DRN.
01019	4	DRAWN IN SOLIDWORKS. RAL COLOUR CODE REMOVED.	15/07/2019	IC

PRODUCT/ASSEMBLY: 1007 - IN BUILDING ANTENNAS

MATERIAL: N/A

FINISH: N/A

WEIGHT N/A

SHEET 1 OF 2

DESCRIPTION: CEILING MOUNT ANTENNA 380-400MHz 0.8m COAX - N SOCKET

APPROVED	D.O.CHECK	SCALE	DIMENSIONS IN mm
KD	AA	1:1	

PANORAMA ANTENNAS